PARTIAL RIGHT SIDE VIEW OF HYDROSENSE CONTROLLER CONNECTIONS

FRONT VIEW WITH DOORS REMOVED

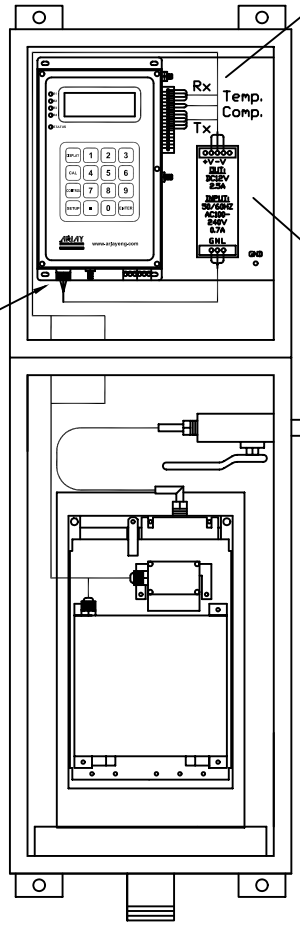

SEE DETAIL B FOR CONNECTIONS

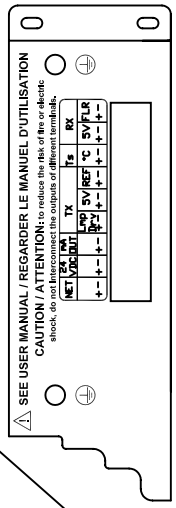

SEE DETAIL A FOR CONNECTIONS (FACTORY WIRED)

DETAIL A: CONTROLLER SIDE VIEW

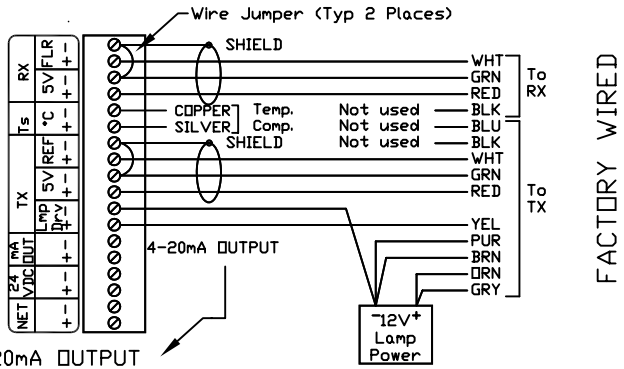

FACTORY WIRED

CUSTOMER CONNECTIONS

(2) 4-20mA OUTPUT

(1) AC POWER CONNECTION

(3) RELAY CONNECTIONS

FACTORY WIRED TO UV LAMP

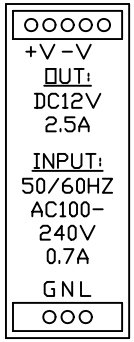

CUSTOMER CONNECTS TO HERE

DETAIL B: CONTROLLER BOTTOM VIEW

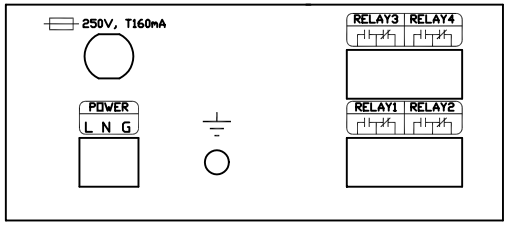

R1, R2, R3 & R4 CONNECTIONS
10 AMP AT 120 VAC
10 AMP AT 24 VDC
RESISTIVE LOAD
DRY CONTACTS

RELAYS 3 & 4:
Maintenance Alarms

RELAYS 1 & 2: Oil Concentration Alarms

NOTE:
POWER CONNECTION
230 VAC
(FACTORY WIRED)

NETWEIGHT: 55kg

POWER CONSUMPTION: 150VA

REV	DATE	DESCRIPTION	CHK'D	APP'D

REVISIONS

ARJAY ENGINEERING LIMITED

PROJECT: HYDROSENSE

DWG. STATUS	BY	DATE D	M	Y
DRAWN	C.M.P.	15	1	03
CHECKED				
APPROVED				

TITLE: HYDROSENSE ELECTRICAL DETAIL

SCALE: N.T.S.

REF. DWGS.

DWG. NO. 20020021

SHT. 1

REV. 0